IM-DND-55

FLUSH MOUNT WATERPROOF MINI-DOME SERIES

IM-DND-55

High Quality, Versatile Fixed Miniature Dome Camera with High Chrome and Walnut Wood Effect Finish, Flush Mount or Bracket Mount, IR LED Illumination for Day / Night Imaging and Waterproof Housing.

- Choice of 2 Finishes, High Chrome or Walnut Wood to Suit Install
- Supplied with 30º Angle Bracket Option
- 3 Axis Gimble Bracket
- High Resolution
- Available in Standard View or Mirror View
- Built-in Infra Red LED's for up to 10 meters visability at night.
- Day / Night Operation switches camera from colour to monochrome in low light
- Extremely Robust Housing
- Low Power Consumption
- Simple 'Plug and Play' Operation
- Compatible with all major chart~plotters that feature video inputs
- Water Resistant ~ IP66
- Corrossion Free Outer Bezel
- EN60945 Compliant

The IM-DND-55 is a truly stylish camera which blends in beautifully with the graceful lines of aft radar arches, cockpits and freeboards. And now, with the introduction of the high gloss Walnut Wood Finish, the IM-DND-55L is the perfect solution for discreet surveillance and security in plush salloon, cabin and cockpit areas, without compromising the look and feel of you interior. Measuring a mere 82mm diameter it is easy to overlook the camera and mistake it for a flush mount light fitting.
Supplied with a 30º 'wedge' bracket, the camera can be mounted in a number of ways to provide desired coverage, and features a high resolution, day / night, colour to mono camera module boasting an impressive 520TVL Sony HAD chipset.

Distribution Details:

Iris Innovations Limited
Unit 9 Swanwick Business Center, Bridge Road
Swanwick. Hampshire SO31 7GB
Tel : +44(0)1489 570797 / Fax: +44(0)1489 875990
email: info@boat-cameras.com
www.boat-cameras.co.uk

IM-DND-55

Technical Information & Specifications

DIMENSIONS

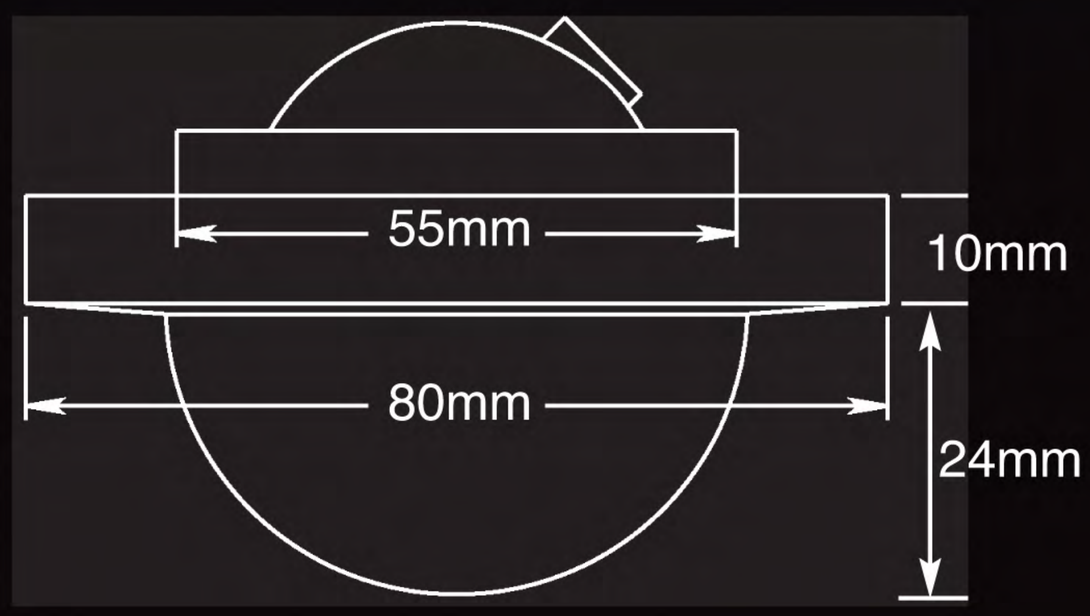

SPECIFICATIONS

Dimensions	80mmØ x 34mm(D). Cutout For Flush mounting 50mmØ
Weight	400g (Without Optional 'Wedge' Bracket)
Material	Anodyzed Aluminum Body, Acrylic Dome Cover, ABS Plastic Fascia
Video System	PAL / NTSC
Image Sensor	1/3" Sony HAD CCD
Total Effective Pixels	PAL: 410/380K / NTSC: 470K 440K
Resolution	550 TV Lines
Shutter Speed	PAL: 1/60~1/100,000 sec / NTSC: 1/50 ~ 1/100,000 sec.
Video Output	VBS 1.0V p~p (75Ω Composite Video)
Scanning System	2:1 Interlace
Sync System	Interlace
S/N Ratio	More than 48db
Min. Illumination	0.5 lux
AGC	Auto
ESC	Auto
Back Light Compensation	Auto
Lens	3.6mm Standard. Options: 2.1mm, 6mm, 8mm, 12mm
Consumption	12VDC (LED ON - MAX 300mA)
Operating Temperature	-10°C ~ + 50°C

Distribution Details

Iris Innovations Limited
Unit 9 Swanwick Business Center, Bridge Road
Swanwick. Hampshire SO31 7GB
Tel : +44(0)1489 570797 / Fax: +44(0)1489 875990
email: info@boat-cameras.com
www.boat-cameras.co.uk